WAP™ Fahrzeugtechnik GmbH

Rudolf-Diesel-Str. 21-23
D- 33178 Borchen

Telefon: +49 (0) 5251 / 691 69 0
Telefax: +49 (0) 5251 / 691 69 11

E-Mail: info@waptech.de
Internet: www.waptech.de

Assembly and Functional description of the pneumatic lock via a spring-loaded cylinder for Version C of the length adjustable drawbar, Model: WZD 180 L and drawbars with the same functionality

The pneumatic lock uses a spring-loaded cylinder that is already mounted on the drawbar.

To charge the spring-loaded cylinder with air, the piston (bolt) is drawn in and unlocked and thus unlocks the inner tube of the drawbar.

Without applying air pressure, the piston (bolt) is pushed out by the spring and therefore locks the inner tube in place.

If the operating control for the air system is located in the driver's cab, then the circuit must be controlled so that it is impossible to activate it accidentally (for example while driving).

The air supply for the spring-loaded cylinder must be separated from the brake system by an overflow valve.

A pin in the spring-loaded cylinder provides a visual indication that the bolt is locked in place. When the bolt is locked, the pin disappears inside the cylinder.
If the bolt is not locked, then the pin extends about 50mm from the middle rear of the cylinder.

An extra sensor can be supplied for this cylinder upon request. This sensor is not included in the scope of delivery and must be ordered separately.
A sensor with a closing function indicates the unlocked state in the driver's cab by illuminating a lamp.

For a sensor with an opening function, the locked state is indicated in the driver's cab by illuminating a lamp. (The lamp is not included in the scope of delivery.)

Deviating from these instructions is only permitted with the consent of the manufacturer.

Subject to change without notice!

Nummer	Stand
MA-044	24.05.2013

WAP™ Fahrzeugtechnik GmbH

Rudolf-Diesel-Str. 21-23
D- 33178 Borchen

Telefon: +49 (0) 5251 / 691 69 0
Telefax: +49 (0) 5251 / 691 69 11

E-Mail: info@waptech.de
Internet: www.waptech.de

Sensor with closer function

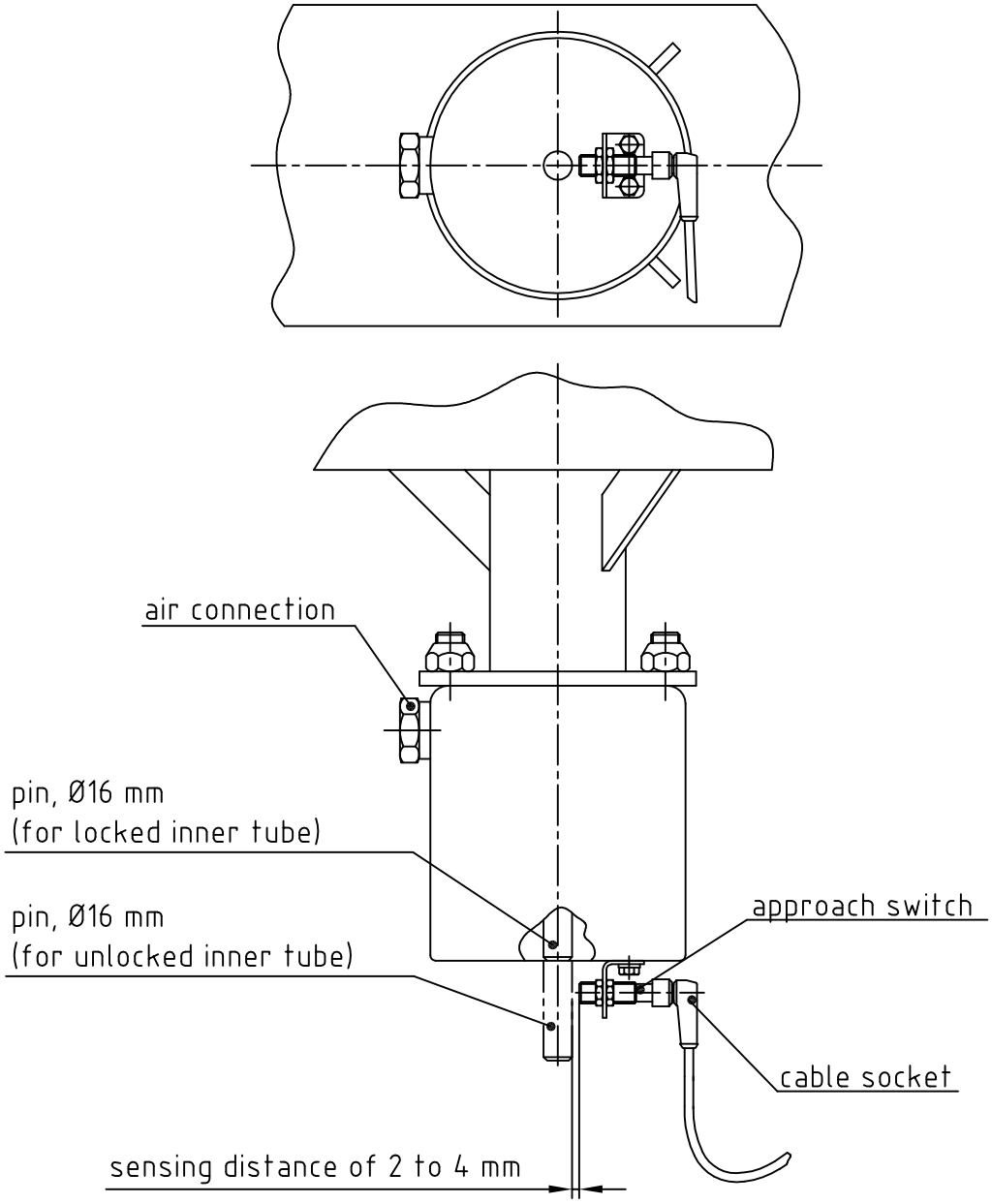

Connection diagram

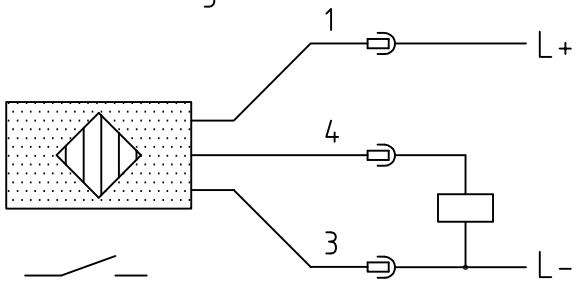

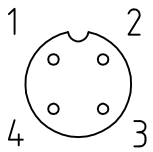

1	BN	brown
2	WH	white
3	BU	blue
4	BK	black

Nummer	Stand
MA-044	24.05.2013

WAP™ Fahrzeugtechnik GmbH

Rudolf-Diesel-Str. 21-23
D- 33178 Borchen

Telefon: +49 (0) 5251 / 691 69 0
Telefax: +49 (0) 5251 / 691 69 11

E-Mail: info@waptech.de
Internet: www.waptech.de

Sensor with opener function

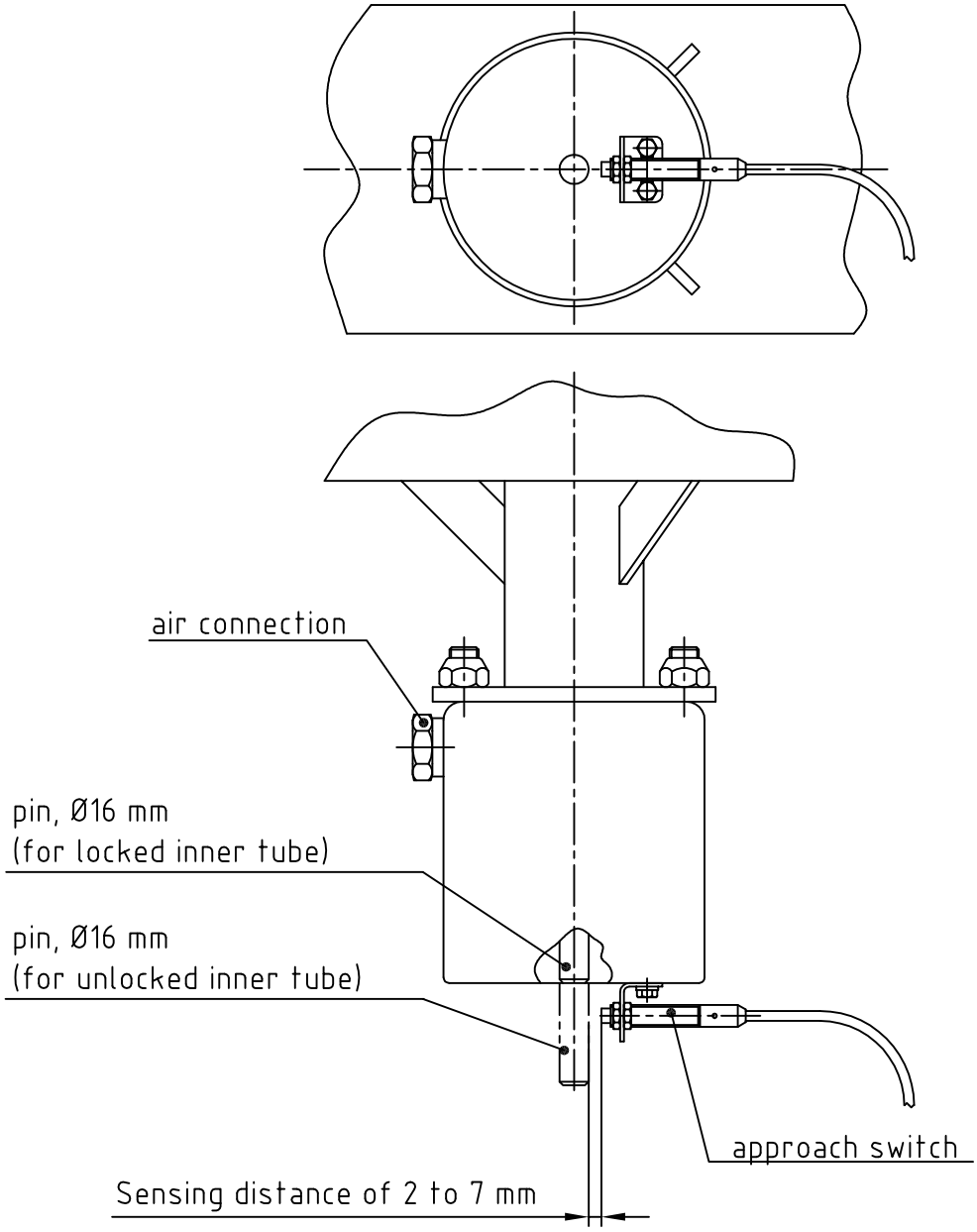

Connection diagram

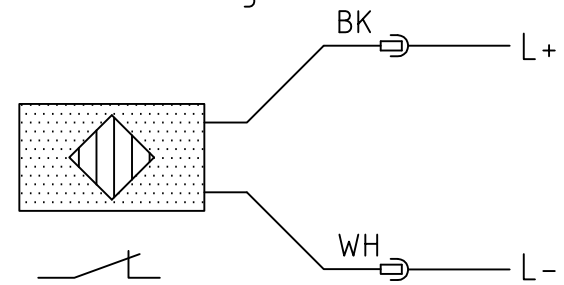

Nummer	Stand
MA-044	24.05.2013

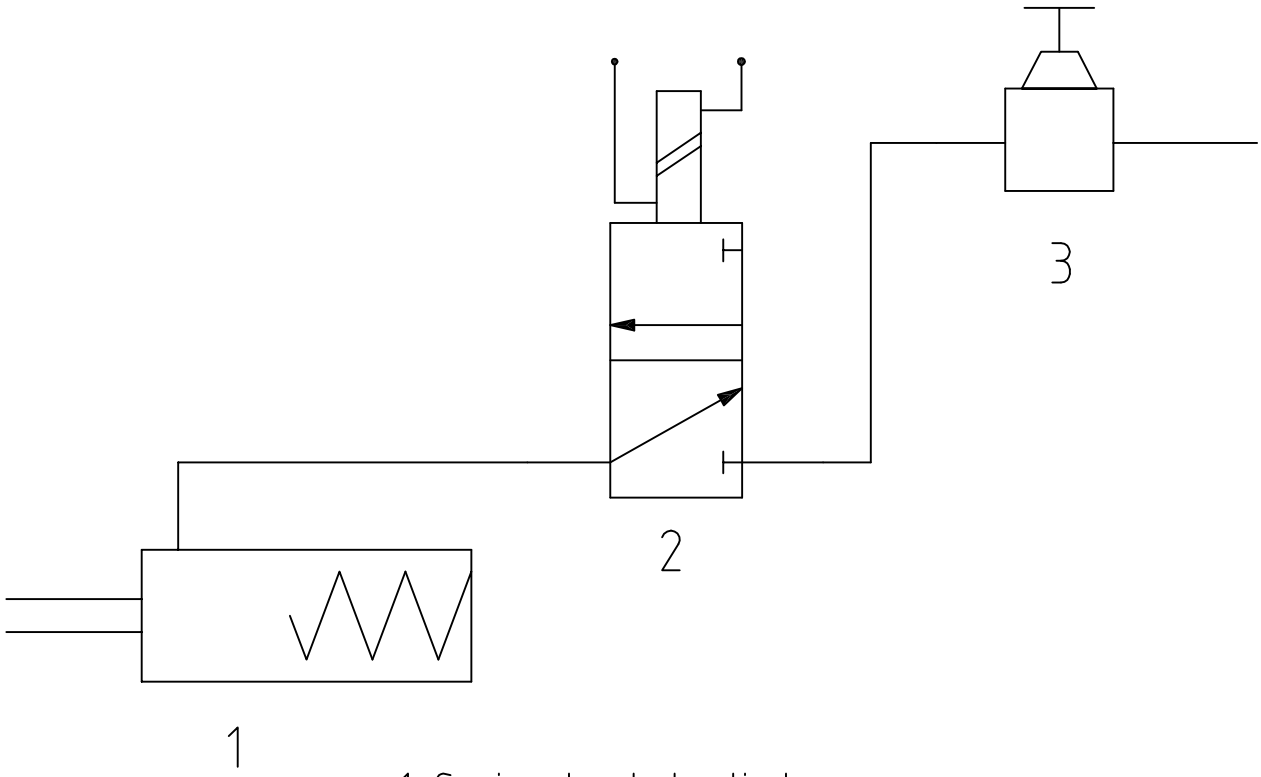

1: Spring-loaded cylinder
2: 3/2 way solenoid valve
3: overflow valve

Pos. 2 and 3 are not in the scope of delivery from WAP!

Data of the spring-loaded cylinder:

Operating pressure: pe ≤ 8 bar
Stroke volume: = 0.9 l

Zust.	Änderung	Datum	Name

WAP Fahrzeugtechnik

Bemerkung:
Suggestion (not mandatory) !

GEZ. :	J. Bock
GEPR.:	NORM.:
DATUM:	24.05.13
MASSTAB:	1:1

BENENNUNG
Schema: drive (unit) of the spring-loaded cylinder

ZEICHNUNG NO.

Format
A4

DIESE ZEICHNUNG IST EIGENTUM DER FA. WAP
JEDE UNERLAUBTE VERWENDUNG WIRD GERICHTLICH VERFOLGT !

CAD Zeichnung